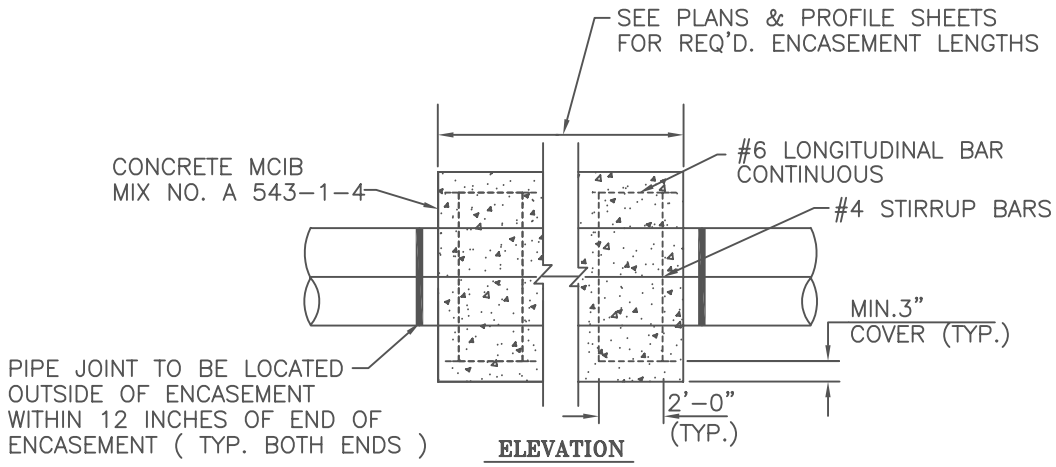

ELEVATION

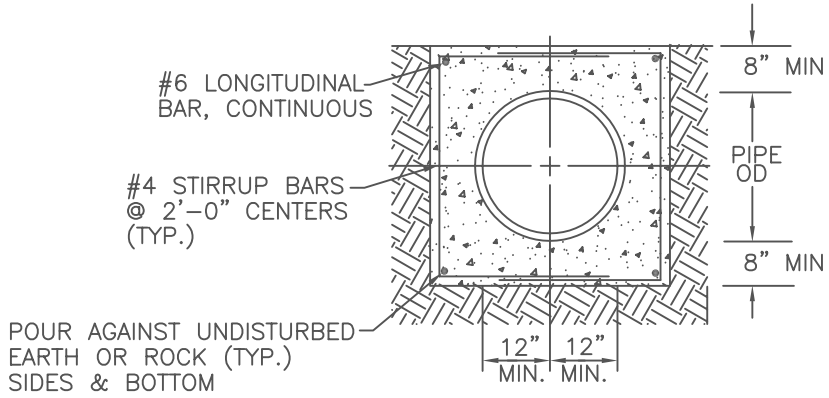

SECTION

ADOPTED

Director of Public Works Date

Entry No. _____

Kansas City, Missouri
Public Works Department
Engineering Division

PIPE ENCASEMENT	STANDARD DRAWING NUMBER P–E